4' DIAMETER MANHOLE BASES

MANHOLE DESIGN SPECIFICATION
CONFORMS TO LATEST:
ASTM DESIGNATION C478

NOTES:

1. SEE 4' DIA. MANHOLE COMPONENTS FOR TYPICAL NOTES.
2. THE MANHOLE IS DESIGNED FOR HS-20 LOADING WITH 18" SOIL COVER.

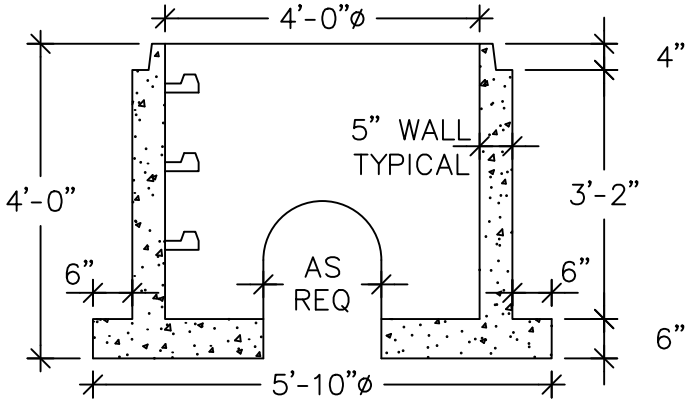

4' DOGHOUSE BASE

SEE BELOW FOR ADDTIONAL BASES AVAILABLE

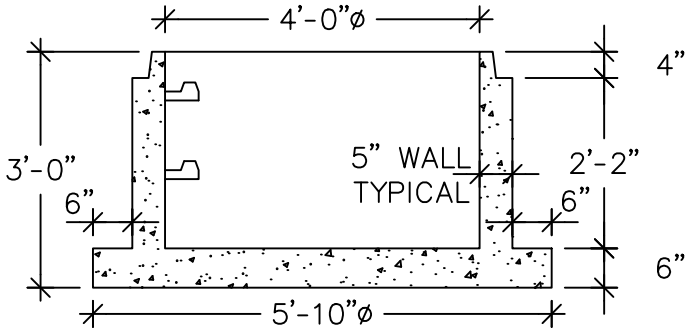

3' BASE

APPROX WEIGHT: 4000 LBS.

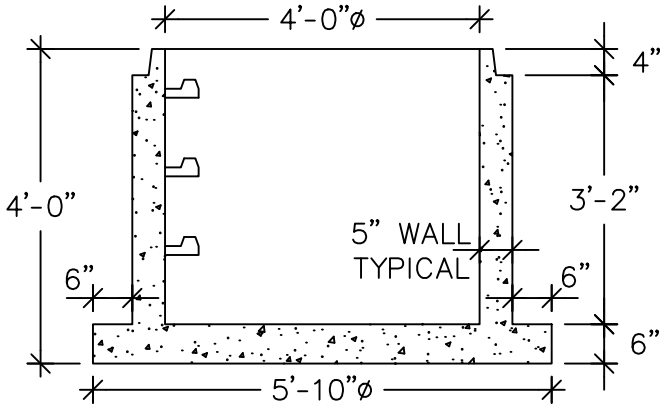

4' BASE

APPROX WEIGHT: 4700 LBS.

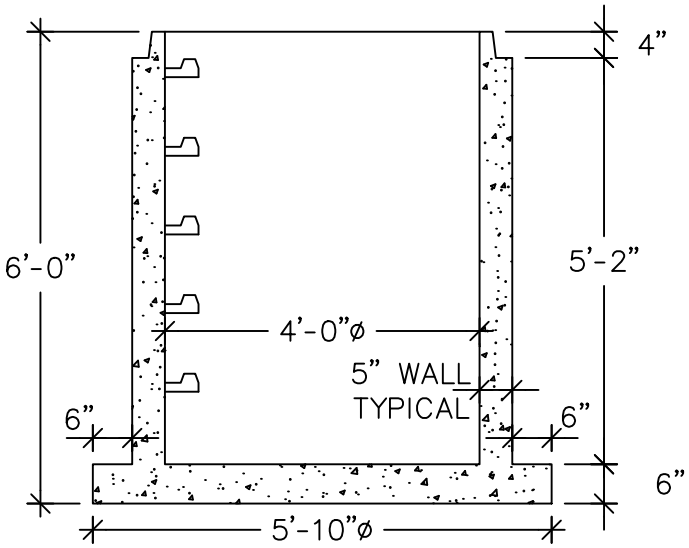

6' BASE

APPROX WEIGHT: 6600 LBS.

UNITED CONCRETE PRODUCTS INC.

173 CHURCH STREET
YALESVILLE, CT 06492

TEL. 800 234-3119
(203) 269-3119

FAX. (203) 265-4941